1. **SUBJECT** : This specification applies on the chip resistors high voltage type was made by **SYNTON-TECH** Corporation。

2. **PART NUMBER** : Part number of the chip resistor is identified by the Style, tolerance, resistance value, voltage 。

Example : **DESCRIPTION : 2010 5% 10K 2KV**

SYNTON CODE : RCH 2010 J 103 - 2KV

Style	Tolerance	Resistance Value	Max. Operating Voltage
RCH0402 RCH0603 RCH0805 RCH1206 RCH2010 RCH2512 (Please see detail of Figure2)	F : ±1% J : ±5%	E24 Series 5% 3 Digits : 2R2 : 2.2Ω 101 : 100Ω 103 : 10K 105 : 1M E96 Series 1% 4 Digits : 2R20 : 2.2Ω 1000 : 100Ω 1002 : 10K 1004 : 1M	100V~3KV

Confidential, Do Not Disseminate.

Marking:

(1) 5% tolerance: 3 digits, first two digits are significant figures, third digit is number of zeros. Letter R is decimal point.

(2) 1% tolerance: 4 digits, first three digits are significant figures, fourth digit is number of zeros. Letter R is decimal point.

(3) *RCH0603±1%: E-24 marking first two digits are significant figures, third digit is number.

***RCH0603±1%:** E-96 marking. (as the below list)

(5) RCH0402 no marking.

5%marking Value=10KΩ — 1%marking Value=10KΩ — 1%marking Value=12.4KΩ — no marking RC0402

RCH0603±1%(E-24) **RCH0603±1%(E-96)**

E-96 MARKING

CodeR	Value	codeR	Value	codeR	Value	codeR	Value	codeR	Value	codeR	Value	codeR	Value	codeR	Value
01	100	13	133	25	178	37	237	49	316	61	422	73	562	85	750
02	102	14	137	26	182	38	243	50	324	62	432	74	576	86	768
03	105	15	140	27	187	39	249	51	332	63	442	75	590	87	787
04	107	16	143	28	191	40	255	52	340	64	453	76	604	88	806
05	110	17	147.	29	196	41	261	53	348	65	464	77	619	89	825
06	113	18	150	30	200	42	267	54	357	66	475	78	634	90	845
07	115	19	154	31	205	43	274	55	365	67	487	79	649	91	866
08	118	20	158	32	210	44	280	56	374	68	499	80	665	92	887
09	121	21	162	33	215	45	287	57	383	69	511	81	681	93	909
10	124	22	165	34	221	46	294	58	392	70	523	82	698	94	931
11	127	23	169	35	226	47	301	59	402	71	536	83	715	95	953
12	130	24	174	36	232	48	309	60	412	72	549	84	732	96	976

This table shows the first two digits for the three-digit EIA-96 part marking scheme.

The third character is a letter multiplier: $Y=10^{-2}$ $X=10^{-1}$ $A=10^{0}$ $B=10^{1}$ $C=10^{2}$ $D=10^{3}$ $E=10^{4}$ $F=10^{5}$

Figure 1

3. ELECTRICAL CHARACTERISTICS

Item / Type	Power Rating at 70°C	Operating Temp. Range	Max. Operating Voltage	Max. Overload Voltage	Resistance Range ±1%	Resistance Range ±5%	TCR (PPM/°C)
RCH0402	1/16W	-55 ~ +155°C	100V	200V	39K - 1MΩ		±100
					1.02MΩ - 10MΩ	1.1MΩ - 20MΩ	±200
					-	22MΩ - 100MΩ	±400
RCH0603	1/10W		200V	400V	56K - 1MΩ		±100
					1.02MΩ - 10MΩ	1.1MΩ - 20MΩ	±200
					-	22MΩ - 100MΩ	±400
RCH0805	1/8W		400V	800V	100K - 1MΩ		±100
					1.02MΩ - 10MΩ	1.1MΩ - 20MΩ	±200
					-	22MΩ - 100MΩ	±400
RCH1206	1/4W		500V	1000V	100K - 1MΩ		±100
					1.02MΩ - 10MΩ	1.1MΩ - 20MΩ	±200
					-	22MΩ - 100MΩ	±400
			800V	1600V	100KΩ-22MΩ	100KΩ-100MΩ	±200
RCH2010	1/2W		2000V	3000V	51K - 1MΩ		±100
					1.02MΩ - 20MΩ	1.1MΩ - 20MΩ	±200
					-	22MΩ - 100MΩ	±400
RCH2512	1W		3000V	4000V	30K - 1MΩ		±100
					1.02MΩ - 20MΩ	1.1MΩ - 20MΩ	±200
					-	22MΩ - 100MΩ	±400

*Operating Voltage=√(P*R) or Max. operating voltage listed above, whichever is lower.

Overload Voltage=2.5√(P*R) or Max. overload voltage listed above, whichever is lower.

Figure 2

4. POWER RATING

(1)Power Derating : The rated power at the temperature in excess of 70℃ shall be derated in accordance with figure3

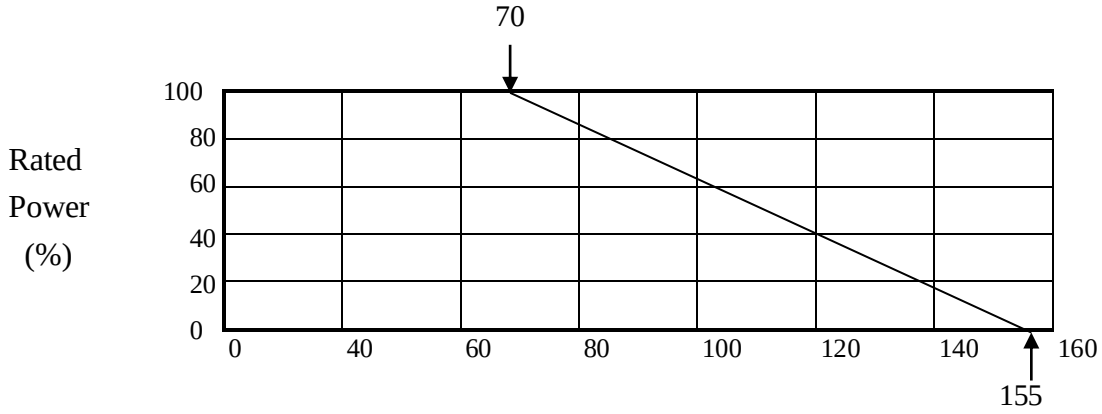

Figure3

(2)Rated Voltage : The DC or AC(rms) continuous working voltage corresponding to the rated power is determined by the following formula:

$$V = \sqrt{R \times P}$$

Where V : Continuous rated DC or AC (rms) working voltage (v)
P : Rated power (w)
R : Resistance value (Ω)

5. CONSTRUCTION AND MATERIALS

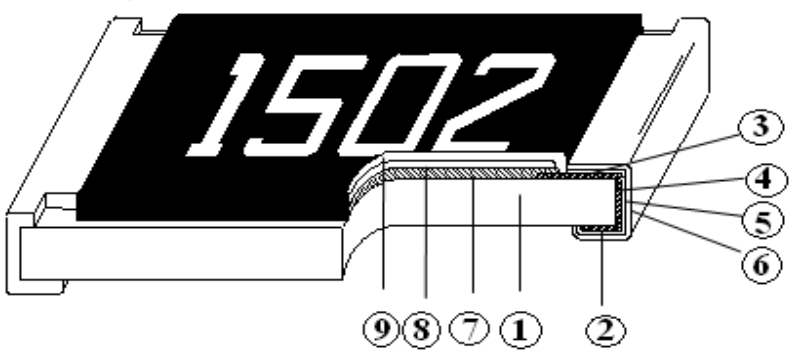

①	Alumina Substrate	④	Edge Electrode (NiCr)	⑦	Resistor Layer (RuO_2/Ag)
②	Bottom Electrode (Ag)	⑤	Barrier Layer (Ni)	⑧	Primary Overcoat (Glass)
③	Top Electrode (Ag-Pd)	⑥	External Electrode (Sn)	⑨	Secondary Overcoat (Epoxy)

Figure4

6. DIMENSIONS

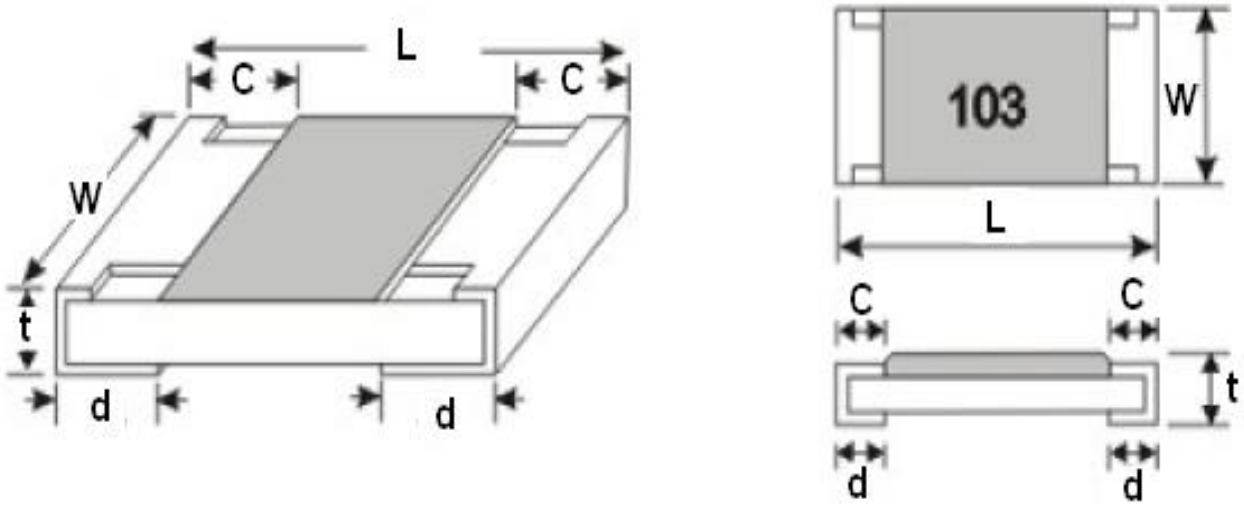

Unit:mm

TYPE	L	W	t	c	d
RCH0402	1.00±0.05	0.50±0.05	0.35±0.05	0.20±0.10	0.20±0.10
RCH0603	1.60±0.10	0.80±0.10	0.45±0.10	0.30±0.20	0.30±0.20
RCH0805	2.00±0.10	1.25±0.10	0.50±0.10	0.35±0.20	0.40±0.20
RCH1206	3.10±0.10	1.55±0.10	0.55±0.10	0.50±0.25	0.50±0.20
RCH2010	5.00±0.10	2.50±0.15	0.55±0.10	0.60±0.25	0.50±0.20
RCH2512	6.35±0.10	3.10±0.15	0.55±0.10	0.60±0.25	0.50±0.20

Figure5

7. SOLDERING CONDITION

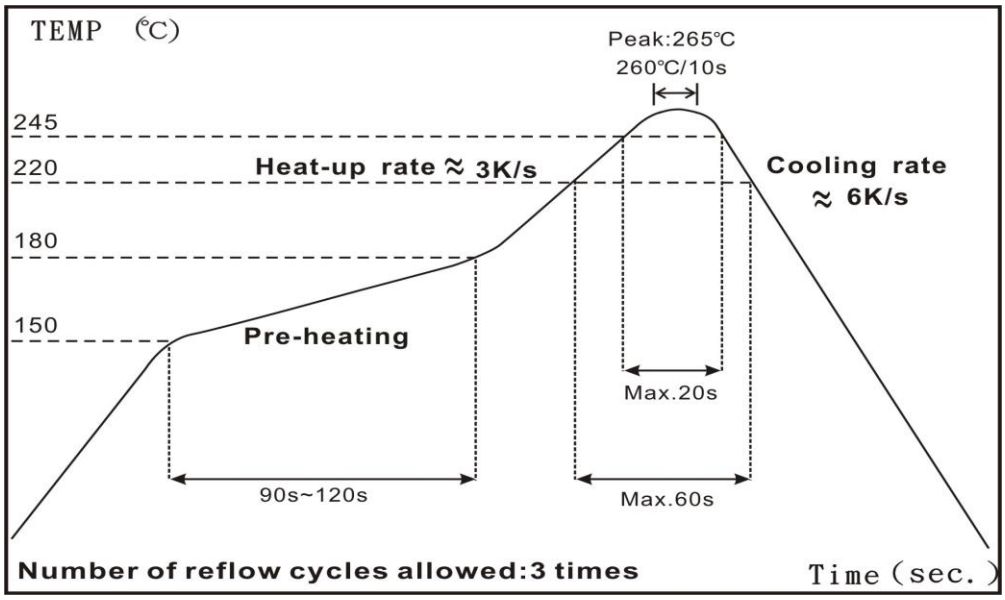

IR Reflow Soldering

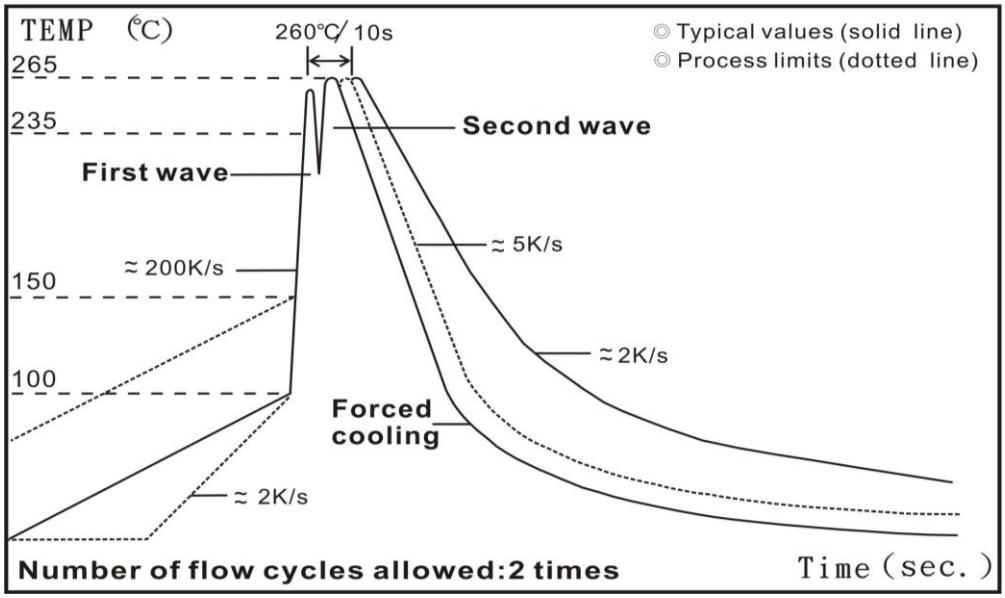

Wave Soldering
(Flow Soldering)

(1) Time of IR reflow soldering at maximum temperature point 260°C：10s

(2) Time of wave soldering at maximum temperature point 260°C：10s

(3) Time of soldering iron at maximum temperature point 410°C：5s

8. ENVIRONMENTAL CHARACTERISTICS

Item	Requirement		Test Method
	1%	5%	
Temperature Coefficient of Resistance (T.C.R.)	As Spec.		**JIS C 5201-1 4.8** **IEC 60115-1 4.8** -55°C~+125°C, 25°C is the reference temperature
Short Time Overload	±(1.0%+0.05Ω)	±(2.0%+0.05Ω)	**JIS C 5201-1 4.13** **IEC 60115-1 4.13** 2.5 times RCWV or Max. overload voltage for 5 seconds
Insulation Resistance	≧ 10G		**JIS C 5201-1 4.6** **IEC 60115-1 4.6** Max. overload voltage for 1 minute
Endurance	±(2.0%+0.10Ω)	±(3.0%+0.10Ω)	**JIS C 5201-1 4.25** **IEC 60115-1 4.25.1** 70±2°C, Max. working voltage for 1000 hrs with 1.5 hrs "ON" and 0.5 hrs "OFF"
Damp Heat with Load	±(2.0%+0.10Ω)	±(3.0%+0.10Ω)	**JIS C 5201-1 4.24** 40±2°C, 90~95% R.H., Max. working voltage for 1000 hrs with 1.5 hrs "ON" and 0.5 hrs "OFF"
Dry Heat	±(1.0%+0.05Ω)	±(1.5%+0.10Ω)	**JIS C 5201-1 4.23.2** **IEC 60115-1 2.23.2** at +155°C for 1000 hrs
Bending Strength	±(1.0%+0.05Ω)	±(1.0%+0.05Ω)	**JIS C 5201-1 4.33** **IEC 60115-1 4.33** Bending once for 5 seconds with 3mm 2010 2512 sizes: 2 mm
Solderability	>95% coverage		**JIS C 5201-1 4.17** **IEC 60115-1 4.17** 245±5°C for 3 seconds
Resistance to Soldering Heat	±(0.5%+0.05Ω)	±(1.0%+0.05Ω)	**JIS C 5201-1 4.18** **IEC 60115-1 4.18** 260±5°C for 10 seconds

Voltage Proof	No breakdown or flashover		**JIS C 5201-1 4.7** **IEC 60115-1 4.7** 1.42 times RCWV (RMS) for 1 minute
Leaching	Individual leaching area ≦ 5% Total leaching area ≦ 10%		**JIS C 5201-1 4.18** **IEC 60068-2-58 8.2.1** 260±5°C for 30 seconds
Rapid Change of Temperature	±(0.5%+0.05Ω)	±(1.0%+0.05Ω)	**JIS C 5201-1 4.19** **IEC 60115-1 4.19** -55°C to +155°C, 5 cycles

***Storage Temperature: 25±3°C; Humidity < 80%RH**

8 TAPING SPECIFICATIONS

●Paper Tape Specifications

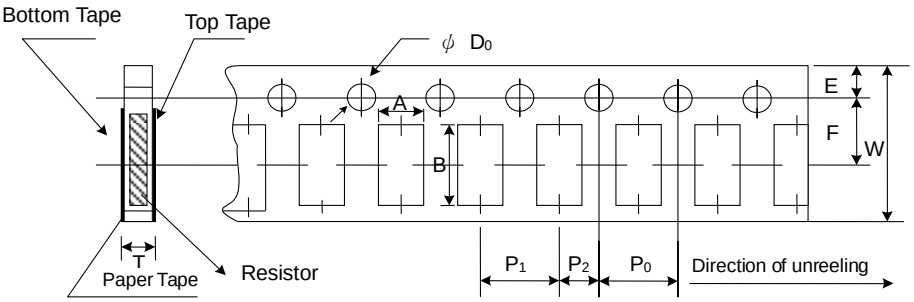

Unit: mm

Type	A	B	W	E	F	P_0	P_1	P_2	ΦD_0	T
RCH0402	0.65 ±0.10	1.15 ±0.1	8.0 ±0.2	1.75 ±0.1	3.50 ±0.05	4.00 ±0.10	2.00 ±0.05	2.00 ±0.05	1.50 +0.1,-0	0.45 ±0.1
RCH0603	1.10 ±0.10	1.90 ±0.1	8.0 ±0.2	1.75 ±0.1	3.50 ±0.05	4.00 ±0.10	4.00 ±0.05	2.00 ±0.05	1.50 +0.1,-0	0.70 ±0.1
RCH0805	1.60 ±0.10	2.40 ±0.2	8.0 ±0.2	1.75 ±0.1	3.50 ±0.05	4.00 ±0.10	4.00 ±0.05	2.00 ±0.05	1.50 +0.1,-0	0.85 ±0.1
RCH1206	1.90 ±0.10	3.50 ±0.2	8.0 ±0.2	1.75 ±0.1	3.50 ±0.05	4.00 ±0.10	4.00 ±0.05	2.00 ±0.05	1.50 +0.1,-0	0.85 ±0.1

Figure6

●Embossed Plastic Tape Specifications

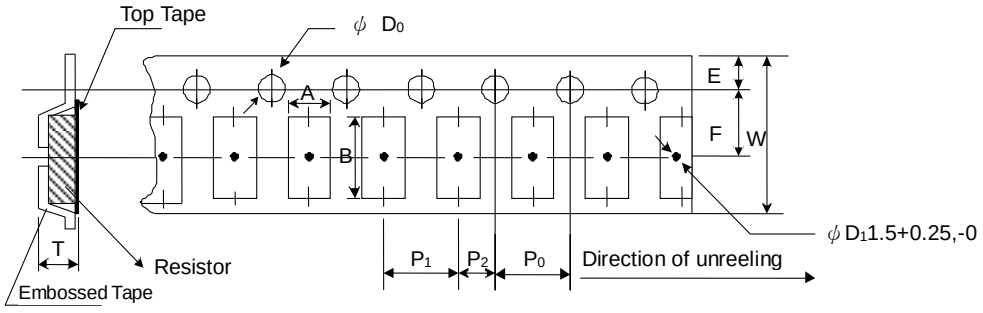

Unit: mm

Type	A	B	W	E	F	P_0	P_1	P_2	ΦD_0	T
RCH2010	2.8 ±0.10	5.5 ±0.10	12.0 ±0.3	1.75 ±0.1	5.5 ±0.05	4.00 ±0.10	4.00 ±0.1	2.00 ±0.05	1.50 +0.1, -0	1.2^{+0}
RCH2512	3.5 ±0.10	6.7 ±0.10	12.0 ±0.3	1.75 ±0.1	5.5 ±0.05	4.00 ±0.10	4.00 ±0.1	2.00 ±0.05	1.50 +0.1, -0	1.2^{+0}

Figure7

●Reel Specifications & Packaging Quantity

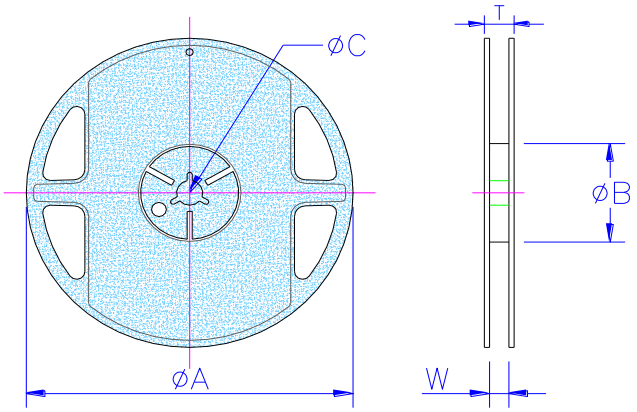

Unit: mm

Type	Packaging Quantity		Tape Width	Reel Diameter	ΦA	ΦB	ΦC	W	T
RCH0402	Paper	10K	8mm	7 inch	178.5±1.5	$60^{+1/-0}$	13.0±0.2	9.0±0.5	12.5±0.5
		20K							
		40K		10 inch	254±1	100±0.5	13.0±0.2	9.5±0.5	13.5±0.5
RCH0603	Paper	5K							
RCH0805		10K		13 inch	330±1	100±0.5	13.0±0.2	9.5±0.5	13.5±0.5
RCH1206		20K							
RCH2010	Embossed	4K	12mm	7 inch	178.5±1.5	$60^{+1/-0}$	13.0±0.5	13.0±0.5	15.5±0.5
RCH2512		8K		10 inch	250±1	62±0.5	13.0±0.5	12.5±0.5	16.5±0.5

Figure8

SGS

化學實驗室-高雄 Chemical Laboratory - Kao., SGS Taiwan Ltd.

試驗報告

號碼(No.) : KA/2018/12122A-01 日期(Date) : 2018/02/26 頁數 (Page) : 1 of 20

Test Report

欣統股份有限公司 / 東莞市欣杭電子有限公司
SYNTON-TECH CORPORATION / SYNTRONIC CORPORATION
台灣省新北市汐止區新台五路一段79號16樓之3 / 廣東省東莞市大朗鎮水 村水常一路13號
16F-3, NO. 79, FAR EAST WORLD CENTER SEC. 1, HSIN TAI WU ROAD, HSI-CHIH DIST., NEW TAIPEI CITY, TAIWAN.
NO. 13, SHUI CHANG YI RD., SHUI KOU LNDUSTRIAL ZONE DA LANG, DONG GUAN, GUANG DONG, CHINA

以下測試樣品係由申請廠商所提供及確認 (The following sample(s) was/were submitted and identified by/on behalf of the applicant as):

樣品名稱(Sample Description)	:	LEAD FREE CHIP RESISTORS & CHIP ARRAYS
樣品型號(Style/Item No.)	:	RC/ RCS/ RT/ RTS/ RL/ RCH/ RCP/ RCAS/ RCCS & YC TYPE
收件日期(Sample Receiving Date)	:	2018/01/29
測試期間(Testing Period)	:	2018/01/29 TO 2018/02/02

測試需求(Test Requested)	:	依據客户指定，參考RoHS2011/65/EU Annex II及其修訂指令(EU) 2015/863測試鎘、鉛、汞、六價鉻、多溴聯苯、多溴聯苯醚, DBP, BBP, DEHP, DIBP. (As specified by client, with reference to RoHS 2011/65/EU Annex II and amending Directive (EU) 2015/863 to determine Cadmium, Lead, Mercury, Cr(VI), PBBs, PBDEs, DBP, BBP, DEHP, DIBP contents in the submitted sample(s).)
測試方法(Test Method)	:	請參閱下一頁 (Please refer to following pages).
測試結果(Test Results)	:	請參閱下一頁 (Please refer to following pages).
結 論(Conclusion)	:	根據客户所提供的樣品，其鎘、鉛、汞、六價鉻、多溴聯苯、多溴聯苯醚, DBP, BBP, DEHP, DIBP的測試結果符合RoHS指令暨(EU) 2015/863之限值要求. (Based on the performed tests on submitted sample(s), the test results of Cadmium, Lead, Mercury, Cr(VI), PBBs, PBDEs, DBP, BBP, DEHP, DIBP comply with the limits as set by RoHS and amending Directive (EU) 2015/863.)

Ray Chang

報告簽署人/Ray Chang, Ph.D./Manager-Tech
Signed for and on behalf of
SGS Taiwan Limited

SGS TAIWAN LTD SGS TAIWAN

This document is issued by the Company subject to its General Conditions of Service printed overleaf, available on request or accessible at http://www.sgs.com/en/Terms-and-Conditions.aspx and, for electronic format documents, subject to Terms and Conditions for Electronic Documents at http://www.sgs.com/en/Terms-and-Conditions/Terms-e-Document.aspx. Attention is drawn to the limitation of liability, indemnification and jurisdiction issues defined therein. Any holder of this document is advised that information contained hereon reflects the Company's findings at the time of its intervention only and within the limits of Client's instructions, if any. The Company's sole responsibility is to its Client and this document does not exonerate parties to a transaction from exercising all their rights and obligations under the transaction documents. This document cannot be reproduced except in full, without prior written approval of the Company. Any unauthorized alteration, forgery or falsification of the content or appearance of this document is unlawful and offenders may be prosecuted to the fullest extent of the law. Unless otherwise stated the results shown in this test report refer only to the sample(s) tested.

SGS

化學實驗室-高雄 Chemical Laboratory - Kao., SGS Taiwan Ltd.

試驗報告

號碼(No.) : KA/2018/12122A-01 日期(Date) : 2018/02/26 頁數 (Page) : 2 of 20

Test Report

欣統股份有限公司 / 東莞市欣杭電子有限公司
SYNTON-TECH CORPORATION / SYNTRONIC CORPORATION
台灣省新北市汐止區新台五路一段79號16樓之3 / 廣東省東莞市大朗鎮水 村水常一路13號
16F-3, NO. 79, FAR EAST WORLD CENTER SEC. 1, HSIN TAI WU ROAD, HSI-CHIH DIST., NEW TAIPEI CITY, TAIWAN.
NO. 13, SHUI CHANG YI RD., SHUI KOU LNDUSTRIAL ZONE DA LANG, DONG GUAN, GUANG DONG, CHINA

測試結果(Test Results)

測試部位(PART NAME)No.1 : 黑色/白色 LEAD FREE CHIP RESISTORS & CHIP ARRAYS
(BLACK/WHITE LEAD FREE CHIP RESISTORS & CHIP ARRAYS)

測試項目 (Test Items)	單位 (Unit)	測試方法 (Method)	方法偵測極限值 (MDL)	結果 (Result) No.1	限值 (Limit)
鎘 / Cadmium (Cd)	mg/kg	參考IEC 62321-5: 2013方法，以感應耦合電漿原子發射光譜儀檢測. / With reference to IEC 62321-5: 2013 and performed by ICP-AES.	2	n.d.	100
鉛 / Lead (Pb)	mg/kg	參考IEC 62321-5: 2013方法，以感應耦合電漿原子發射光譜儀檢測. / With reference to IEC 62321-5: 2013 and performed by ICP-AES.	2	151	1000
汞 / Mercury (Hg)	mg/kg	參考IEC 62321-4: 2013方法，以感應耦合電漿原子發射光譜儀檢測. / With reference to IEC 62321-4: 2013 and performed by ICP-AES.	2	n.d.	1000
六價鉻 / Hexavalent Chromium Cr(VI)	mg/kg	參考IEC 62321-7-2:2017，以UV-VIS檢測. / With reference to IEC 62321-7-2:2017 and performed by UV-VIS.	8	n.d.	1000
多溴聯苯總和 / Sum of PBBs	mg/kg	參考IEC 62321-6: 2015方法，以氣相層析/質譜儀檢測. / With reference to IEC 62321-6: 2015 and performed by GC/MS.	-	n.d.	1000
一溴聯苯 / Monobromobiphenyl			5	n.d.	-
二溴聯苯 / Dibromobiphenyl			5	n.d.	-
三溴聯苯 / Tribromobiphenyl			5	n.d.	-
四溴聯苯 / Tetrabromobiphenyl			5	n.d.	-
五溴聯苯 / Pentabromobiphenyl			5	n.d.	-
六溴聯苯 / Hexabromobiphenyl			5	n.d.	-
七溴聯苯 / Heptabromobiphenyl			5	n.d.	-
八溴聯苯 / Octabromobiphenyl			5	n.d.	-
九溴聯苯 / Nonabromobiphenyl			5	n.d.	-
十溴聯苯 / Decabromobiphenyl			5	n.d.	-

This document is issued by the Company subject to its General Conditions of Service printed overleaf, available on request or accessible at http://www.sgs.com/en/Terms-and-Conditions.aspx and, for electronic format documents, subject to Terms and Conditions for Electronic Documents at http://www.sgs.com/en/Terms-and-Conditions/Terms-e-Document.aspx. Attention is drawn to the limitation of liability, indemnification and jurisdiction issues defined therein. Any holder of this document is advised that information contained hereon reflects the Company's findings at the time of its intervention only and within the limits of Client's instructions, if any. The Company's sole responsibility is to its Client and this document does not exonerate parties to a transaction from exercising all their rights and obligations under the transaction documents. This document cannot be reproduced except in full, without prior written approval of the Company. Any unauthorized alteration, forgery or falsification of the content or appearance of this document is unlawful and offenders may be prosecuted to the fullest extent of the law. Unless otherwise stated the results shown in this test report refer only to the sample(s) tested.

Confidential, Do Not Disseminate.

SGS

化學實驗室-高雄 Chemical Laboratory - Kao., SGS Taiwan Ltd.

試驗報告

號碼(No.) : KA/2018/12122A-01 日期(Date) : 2018/02/26 頁數 (Page) : 3 of 20

Test Report

欣統股份有限公司 / 東莞市欣杭電子有限公司
SYNTON-TECH CORPORATION / SYNTRONIC CORPORATION
台灣省新北市汐止區新台五路一段79號16樓之3 / 廣東省東莞市大朗鎮水 村水常一路13號
16F-3, NO. 79, FAR EAST WORLD CENTER SEC. 1, HSIN TAI WU ROAD, HSI-CHIH DIST., NEW TAIPEI CITY, TAIWAN.
NO. 13, SHUI CHANG YI RD., SHUI KOU LNDUSTRIAL ZONE DA LANG, DONG GUAN, GUANG DONG, CHINA

測試項目 (Test Items)	單位 (Unit)	測試方法 (Method)	方法偵測極限值 (MDL)	結果 (Result) No.1	限值 (Limit)
多溴聯苯醚總和 / Sum of PBDEs	mg/kg	參考IEC 62321-6: 2015方法, 以氣相層析/質譜儀檢測. / With reference to IEC 62321-6: 2015 and performed by GC/MS.	-	n.d.	1000
一溴聯苯醚 / Monobromodiphenyl ether			5	n.d.	-
二溴聯苯醚 / Dibromodiphenyl ether			5	n.d.	-
三溴聯苯醚 / Tribromodiphenyl ether			5	n.d.	-
四溴聯苯醚 / Tetrabromodiphenyl ether			5	n.d.	-
五溴聯苯醚 / Pentabromodiphenyl ether			5	n.d.	-
六溴聯苯醚 / Hexabromodiphenyl ether			5	n.d.	-
七溴聯苯醚 / Heptabromodiphenyl ether			5	n.d.	-
八溴聯苯醚 / Octabromodiphenyl ether			5	n.d.	-
九溴聯苯醚 / Nonabromodiphenyl ether			5	n.d.	-
十溴聯苯醚 / Decabromodiphenyl ether			5	n.d.	-
鄰苯二甲酸二異丁酯 / DIBP (Di-isobutyl phthalate) (CAS No.: 84-69-5)	mg/kg	參考IEC 62321-8:2017, 以氣相層析儀/質譜儀檢測. / With reference to IEC 62321-8:2017. Analysis was performed by GC/MS.	50	n.d.	1000
鄰苯二甲酸二丁酯 / DBP (Dibutyl phthalate) (CAS No.: 84-74-2)			50	n.d.	1000
鄰苯二甲酸丁苯甲酯 / BBP (Butyl Benzyl phthalate) (CAS No.: 85-68-7)			50	n.d.	1000
鄰苯二甲酸二 (2-乙基己基)酯 / DEHP (Di- (2-ethylhexyl) phthalate) (CAS No.: 117-81-7)			50	n.d.	1000
鄰苯二甲酸二正辛酯 / DNOP (Di-n-octyl phthalate) (CAS No.: 117-84-0)			50	n.d.	-
鄰苯二甲酸二異壬酯 / DINP (Di-isononyl phthalate) (CAS No.: 28553-12-0, 68515-48-0)			50	n.d.	-
鄰苯二甲酸二異癸酯 / DIDP (Di-isodecyl phthalate) (CAS No.: 26761-40-0, 68515-49-1)			50	n.d.	-

This document is issued by the Company subject to its General Conditions of Service printed overleaf, available on request or accessible at http://www.sgs.com/en/Terms-and-Conditions.aspx and, for electronic format documents, subject to Terms and Conditions for Electronic Documents at http://www.sgs.com/en/Terms-and-Conditions/Terms-e-Document.aspx. Attention is drawn to the limitation of liability, indemnification and jurisdiction issues defined therein. Any holder of this document is advised that information contained hereon reflects the Company's findings at the time of its intervention only and within the limits of Client's instructions, if any. The Company's sole responsibility is to its Client and this document does not exonerate parties to a transaction from exercising all their rights and obligations under the transaction documents. This document cannot be reproduced except in full, without prior written approval of the Company. Any unauthorized alteration, forgery or falsification of the content or appearance of this document is unlawful and offenders may be prosecuted to the fullest extent of the law. Unless otherwise stated the results shown in this test report refer only to the sample(s) tested.

TWC3705569

Confidential, Do Not Disseminate.

SGS

化學實驗室-高雄 Chemical Laboratory - Kao., SGS Taiwan Ltd.

試驗報告

號碼(No.) : KA/2018/12122A-01 日期(Date) : 2018/02/26 頁數 (Page) : 4 of 20

Test Report

欣統股份有限公司 / 東莞市欣航電子有限公司
SYNTON-TECH CORPORATION / SYNTRONIC CORPORATION
台灣省新北市汐止區新台五路一段79號16樓之3 / 廣東省東莞市大朗鎮水 村水常一路13號
16F-3, NO. 79, FAR EAST WORLD CENTER SEC. 1, HSIN TAI WU ROAD, HSI-CHIH DIST., NEW TAIPEI CITY, TAIWAN.
NO. 13, SHUI CHANG YI RD., SHUI KOU LNDUSTRIAL ZONE DA LANG, DONG GUAN, GUANG DONG, CHINA

測試項目 (Test Items)	單位 (Unit)	測試方法 (Method)	方法偵測極限值 (MDL)	結果 (Result) No.1	限值 (Limit)
鄰苯二甲酸二己酯 / DNHP (Di-n-hexyl phthalate) (CAS No.: 84-75-3)	mg/kg	參考IEC 62321-8:2017, 以氣相層析儀/質譜儀檢測. / With reference to IEC 62321-8:2017. Analysis was performed by GC/MS.	50	n.d.	-
鄰苯二甲酸二(C6-8支鏈與直鏈)烷基酯,富C7 / DIHP (1,2-Benzenedicarboxylic acid, di-C6-8-branched alkyl esters, C7-rich) (CAS No.: 71888-89-6)			50	n.d.	-
鄰苯二甲酸二(C7-11支鏈與直鏈)烷基酯 / DHNUP (1,2-Benzenedicarboxylic acid, di-C7-11-branched and linear alkyl esters) (CAS No.: 68515-42-4)			50	n.d.	-
銻 / Antimony (Sb)	mg/kg	參考US EPA 3052方法, 用感應藕合電漿原子發射光譜儀檢測銻含量. / With reference to US EPA Method 3052 for Antimony Content. Analysis was performed by ICP-AES.	2	n.d.	-
三氧化二銻 / Antimony trioxide (Sb2O3)*** (CAS No.: 1309-64-4)			-	n.d.	-
六溴環十二烷及所有主要被辨別出的異構物 / Hexabromocyclododecane (HBCDD) and all major diastereoisomers identified (α- HBCDD, β- HBCDD, γ- HBCDD) (CAS No.: 25637-99-4 and 3194-55-6 (134237-51-7, 134237-50-6, 134237-52-8))	mg/kg	參考IEC 62321: 2008方法, 以氣相層析/質譜儀檢測. / With reference to IEC 62321: 2008 method. Analysis was performed by GC/MS.	5	n.d.	-

This document is issued by the Company subject to its General Conditions of Service printed overleaf, available on request or accessible at http://www.sgs.com/en/Terms-and-Conditions.aspx and, for electronic format documents, subject to Terms and Conditions for Electronic Documents at http://www.sgs.com/en/Terms-and-Conditions/Terms-e-Document.aspx. Attention is drawn to the limitation of liability, indemnification and jurisdiction issues defined therein. Any holder of this document is advised that information contained hereon reflects the Company's findings at the time of its intervention only and within the limits of Client's instructions, if any. The Company's sole responsibility is to its Client and this document does not exonerate parties to a transaction from exercising all their rights and obligations under the transaction documents. This document cannot be reproduced except in full, without prior written approval of the Company. Any unauthorized alteration, forgery or falsification of the content or appearance of this document is unlawful and offenders may be prosecuted to the fullest extent of the law. Unless otherwise stated the results shown in this test report refer only to the sample(s) tested.

Confidential, Do Not Disseminate.

SGS

化學實驗室-高雄 Chemical Laboratory - Kao., SGS Taiwan Ltd.

試驗報告

號碼(No.) : KA/2018/12122A-01 日期(Date) : 2018/02/26 頁數 (Page) : 5 of 20

Test Report

欣統股份有限公司 / 東莞市欣杭電子有限公司
SYNTON-TECH CORPORATION / SYNTRONIC CORPORATION
台灣省新北市汐止區新台五路一段79號16樓之3 / 廣東省東莞市大朗鎮水 村水常一路13號
16F-3, NO. 79, FAR EAST WORLD CENTER SEC. 1, HSIN TAI WU ROAD, HSI-CHIH DIST., NEW TAIPEI CITY, TAIWAN.
NO. 13, SHUI CHANG YI RD., SHUI KOU LNDUSTRIAL ZONE DA LANG, DONG GUAN, GUANG DONG, CHINA

測試項目 (Test Items)	單位 (Unit)	測試方法 (Method)	方法偵測極限值 (MDL)	結果 (Result) No.1	限值 (Limit)
富馬酸二甲酯 / Dimethyl Fumarate (CAS No.: 624-49-7)	mg/kg	參考US EPA 3550C方法，以氣相層析質譜儀檢測. / With reference to US EPA 3550C method. Analysis was performed by GC/MS.	0.1	n.d.	-
聚氯乙烯 / PVC	**	以紅外光譜分析及焰色法檢測. / Analysis was performed by FTIR and FLAME Test.	-	Negative	-
紅磷 / Red phosphorus	**	本測試以熱裂解-氣相層析/質譜儀分析. / Analysis was performed by Pyrolyzer-GC/MS.	-	Negative	-
全氟辛烷磺酸 / Perfluorooctane sulfonates (PFOS)	mg/kg	參考US EPA 3550C: 2007方法，以液相層析/質譜儀檢測. / With reference to US EPA 3550C: 2007. Analysis was performed by LC/MS.	10	n.d.	-
全氟辛酸(鹽) / PFOA (CAS No.: 335-67-1)			10	n.d.	-
鹵素 / Halogen					
鹵素 (氟) / Halogen-Fluorine (F) (CAS No.: 014762-94-8)	mg/kg	參考BS EN 14582:2016，以離子層析儀分析. / With reference to BS EN 14582:2016. Analysis was performed by IC.	50	n.d.	-
鹵素 (氯) / Halogen-Chlorine (Cl) (CAS No.: 022537-15-1)			50	n.d.	-
鹵素 (溴) / Halogen-Bromine (Br) (CAS No.: 010097-32-2)			50	n.d.	-
鹵素 (碘) / Halogen-Iodine (I) (CAS No.: 014362-44-8)			50	n.d.	-

This document is issued by the Company subject to its General Conditions of Service printed overleaf, available on request or accessible at http://www.sgs.com/en/Terms-and-Conditions.aspx and, for electronic format documents, subject to Terms and Conditions for Electronic Documents at http://www.sgs.com/en/Terms-and-Conditions/Terms-e-Document.aspx. Attention is drawn to the limitation of liability, indemnification and jurisdiction issues defined therein. Any holder of this document is advised that information contained hereon reflects the Company's findings at the time of its intervention only and within the limits of Client's instructions, if any. The Company's sole responsibility is to its Client and this document does not exonerate parties to a transaction from exercising all their rights and obligations under the transaction documents. This document cannot be reproduced except in full, without prior written approval of the Company. Any unauthorized alteration, forgery or falsification of the content or appearance of this document is unlawful and offenders may be prosecuted to the fullest extent of the law. Unless otherwise stated the results shown in this test report refer only to the sample(s) tested.

Confidential, Do Not Disseminate.

SGS

化學實驗室-高雄 Chemical Laboratory - Kao., SGS Taiwan Ltd.

試驗報告

號碼(No.) : KA/2018/12122A-01 日期(Date) : 2018/02/26 頁數 (Page) : 6 of 20

Test Report

欣統股份有限公司 / 東莞市欣杭電子有限公司
SYNTON-TECH CORPORATION / SYNTRONIC CORPORATION
台灣省新北市汐止區新台五路一段79號16樓之3 / 廣東省東莞市大朗鎮水 村水常一路13號
16F-3, NO. 79, FAR EAST WORLD CENTER SEC. 1, HSIN TAI WU ROAD, HSI-CHIH DIST., NEW TAIPEI CITY, TAIWAN.
NO. 13, SHUI CHANG YI RD., SHUI KOU LNDUSTRIAL ZONE DA LANG, DONG GUAN, GUANG DONG, CHINA

測試項目 (Test Items)	單位 (Unit)	測試方法 (Method)	方法偵測極限值 (MDL)	結果 (Result) No.1	限值 (Limit)
多環芳香烴 / Polynuclear Aromatic Hydrocarbons (PAHs)					
苊 / Acenaphthene (CAS No.: 83-32-9)	mg/kg	參考AfPS GS 2014:01 PAK方法，以氣相層析/質譜儀檢測. / With reference to AfPS GS 2014:01 PAK method. Analysis was performed by GC/MS.	0.2	n.d.	-
苊烯 / Acenaphthylene (CAS No.: 208-96-8)			0.2	n.d.	-
蒽 / Anthracene (CAS No.: 120-12-7)			0.2	n.d.	-
苯駢蒽 / Benzo[a]anthracene (CAS No.: 56-55-3)			0.2	n.d.	-
苯駢(a)芘 / Benzo[a]pyrene (CAS No.: 50-32-8)			0.2	n.d.	-
苯(b)苯駢芴 / Benzo[b]fluoranthene (CAS No.: 205-99-2)			0.2	n.d.	-
苯駢苝 / Benzo[g,h,i]perylene (CAS No.: 191-24-2)			0.2	n.d.	-
苯(k)苯駢芴 / Benzo[k]fluoranthene (CAS No.: 207-08-9)			0.2	n.d.	-
Chrysene (CAS No.: 218-01-9)			0.2	n.d.	-
二苯駢蒽 / Dibenzo[a,h]anthracene (CAS No.: 53-70-3)			0.2	n.d.	-
苯駢芴 / Fluoranthene (CAS No.: 206-44-0)			0.2	n.d.	-
芴 / Fluorene (CAS No.: 86-73-7)			0.2	n.d.	-
茚酮芘 / Indeno[1,2,3-c,d] pyrene (CAS No.: 193-39-5)			0.2	n.d.	-
萘 / Naphthalene (CAS No.: 91-20-3)			0.2	n.d.	-
菲 / Phenanthrene (CAS No.: 85-01-8)			0.2	n.d.	-
芘 / Pyrene (CAS No.: 129-00-0)			0.2	n.d.	-
苯(j)苯駢芴 / Benzo[j]fluoranthene (CAS No.: 205-82-3)			0.2	n.d.	-
苯駢(e)芘 / Benzo[e]pyrene (CAS No.: 192-97-2)			0.2	n.d.	-
多環芳香烴18項總和 / Sum of 18 PAHs	mg/kg	-	-	n.d.	-

This document is issued by the Company subject to its General Conditions of Service printed overleaf, available on request or accessible at http://www.sgs.com/en/Terms-and-Conditions.aspx and, for electronic format documents, subject to Terms and Conditions for Electronic Documents at http://www.sgs.com/en/Terms-and-Conditions/Terms-e-Document.aspx. Attention is drawn to the limitation of liability, indemnification and jurisdiction issues defined therein. Any holder of this document is advised that information contained hereon reflects the Company's findings at the time of its intervention only and within the limits of Client's instructions, if any. The Company's sole responsibility is to its Client and this document does not exonerate parties to a transaction from exercising all their rights and obligations under the transaction documents. This document cannot be reproduced except in full, without prior written approval of the Company. Any unauthorized alteration, forgery or falsification of the content or appearance of this document is unlawful and offenders may be prosecuted to the fullest extent of the law. Unless otherwise stated the results shown in this test report refer only to the sample(s) tested.

Confidential, Do Not Disseminate.

SGS

化學實驗室-高雄 Chemical Laboratory - Kao., SGS Taiwan Ltd.

試驗報告

號碼(No.) : KA/2018/12122A-01 日期(Date) : 2018/02/26 頁數 (Page) : 7 of 20

Test Report

欣統股份有限公司 / 東莞市欣杭電子有限公司
SYNTON-TECH CORPORATION / SYNTRONIC CORPORATION
台灣省新北市汐止區新台五路一段79號16樓之3 / 廣東省東莞市大朗鎮水 村水常一路13號
16F-3, NO. 79, FAR EAST WORLD CENTER SEC. 1, HSIN TAI WU ROAD, HSI-CHIH DIST., NEW TAIPEI CITY, TAIWAN.
NO. 13, SHUI CHANG YI RD., SHUI KOU LNDUSTRIAL ZONE DA LANG, DONG GUAN, GUANG DONG, CHINA

備註(Note):

1. mg/kg = ppm ; 0.1wt% = 1000ppm
2. n.d. = Not Detected (未檢出)
3. MDL = Method Detection Limit (方法偵測極限值)
4. "-" = Not Regulated (無規格值)
5. **= Qualitative analysis (No Unit) 定性分析(無單位)
6. Negative = Undetectable 陰性(未偵測到); Positive = Detectable 陽性(已偵測到)
7. ***: 該物質是由"銻"之測試結果計算得知. 其MDL是針對"銻"之評估. (The substance was calculated by the test results of Antimony. The MDL is evaluated for Antimony.)
8. 此為2018/02/02所發行KA/2018/12122之加發報告，原始資料請參考KA/2018/12122. (This is the additional test report of KA/2018/12122 which was issued on 2018/02/02. Please refer to KA/2018/12122 for original information.)

PFOS參考資訊(Reference Information) : 持久性有機污染物 POPs - (EU) 757/2010

PFOS濃度在物質或製備中不得超過0.001%(10ppm)，在半成品、成品或零部件中不得超過0.1%(1000ppm)，在紡織品或塗層材料中不得超過1μg/m²。(Outlawing PFOS as substances or preparations in concentrations above 0.001% (10ppm), in semi-finished products or articles or parts at a level above 0.1%(1000ppm), in textiles or other coated materials above 1μg/m².)

全氟辛烷磺酸指全氟辛烷磺酸和它的衍生物包括全氟辛烷磺酸，全氟辛基磺酰胺，N-甲基全氟辛烷磺酰胺，N-乙基全氟辛烷磺酰胺，N-甲基全氟辛基磺酰基氨基乙醇，N-乙基全氟辛基磺酰基氨基乙醇。(PFOS refer to Perfluorooctanesulfonic acid and its derivatives including Perfluoroctanesulfonic acid, Perfluoroctane sulfonamide, N-Methylperfluoroctane sulfonamide, N-Ethylperfluoroctane sulfonamide, N-Methylperfluoroctane sulfonamidoethanol and N-Ethylperfluoroctane sulfonamidoethanol.)

This document is issued by the Company subject to its General Conditions of Service printed overleaf, available on request or accessible at http://www.sgs.com/en/Terms-and-Conditions.aspx and, for electronic format documents, subject to Terms and Conditions for Electronic Documents at http://www.sgs.com/en/Terms-and-Conditions/Terms-e-Document.aspx. Attention is drawn to the limitation of liability, indemnification and jurisdiction issues defined therein. Any holder of this document is advised that information contained hereon reflects the Company's findings at the time of its intervention only and within the limits of Client's instructions, if any. The Company's sole responsibility is to its Client and this document does not exonerate parties to a transaction from exercising all their rights and obligations under the transaction documents. This document cannot be reproduced except in full, without prior written approval of the Company. Any unauthorized alteration, forgery or falsification of the content or appearance of this document is unlawful and offenders may be prosecuted to the fullest extent of the law. Unless otherwise stated the results shown in this test report refer only to the sample(s) tested.

TWC3705565

SGS Taiwan Ltd. 台灣檢驗科技股份有限公司 | No.61, Kai -Fa Road, Nanzih Export Processing Zone, Kaohsiung, Taiwan / 高雄市楠梓加工出口區開發路61號
t (886-7) 301-2121 f (886-7) 301-0867 www.sgs.tw
Member of SGS Group

2001

SGS

化學實驗室-高雄 Chemical Laboratory - Kao., SGS Taiwan Ltd.

試驗報告

號碼(No.) : KA/2018/12122A-01 日期(Date) : 2018/02/26 頁數 (Page) : 8 of 20

Test Report

欣統股份有限公司 / 東莞市欣杭電子有限公司
SYNTON-TECH CORPORATION / SYNTRONIC CORPORATION
台灣省新北市汐止區新台五路一段79號16樓之3 / 廣東省東莞市大朗鎮水 村水常一路13號
16F-3, NO. 79, FAR EAST WORLD CENTER SEC. 1, HSIN TAI WU ROAD, HSI-CHIH DIST., NEW TAIPEI CITY, TAIWAN.
NO. 13, SHUI CHANG YI RD., SHUI KOU LNDUSTRIAL ZONE DA LANG, DONG GUAN, GUANG DONG, CHINA

德國產品安全委員會(AfPS) GS PAHs 要求 /
AfPS (German commission for Product Safety): GS PAHs requirements

項目 (Parameter)	第1類 (Category 1)	第2類 (Category 2)		第3類 (Category 3)	
	意圖放入嘴內的材料或玩具會與皮膚有所接觸(超過30秒). (Material indented to be put in the mouth or toys with intended skin contact (longer than 30 s).)	不屬於第1類的材料並可預見與皮膚接觸逾30秒(長期或經常與皮膚接觸). (Materials not falling under category 1 with foreseeable contact to skin for longer than 30 seconds (long-term skin or frequent contact).)		可預見與皮膚接觸短於30秒(短期與皮膚接觸), 以及不屬於第1類或第2類的材料. (Materials not falling under category 1 or 2 with foreseeable contact to skin for less than 30 seconds (short-term skin contact).)	
		列於2009/48/EC之玩具 (Toy under 2009/48/EC)	列於德國產品安全法之其他產品 (Other products under ProdSG)	列於2009/48/EC之玩具 (Toy under 2009/48/EC)	列於德國產品安全法之其他產品 (Other products under ProdSG)
Naphthalene	< 1	< 2		< 10	
Acenaphthylene Acenaphthene Fluorene Phenanthrene Anthracene Fluoranthene Pyrene	< 1 Sum	< 5 Sum	< 10 Sum	< 20 Sum	< 50 Sum
Benzo[a]anthracene	< 0.2	< 0.2	< 0.5	< 0.5	< 1
Chrysene	< 0.2	< 0.2	< 0.5	< 0.5	< 1
Benzo[b]fluoranthene	< 0.2	< 0.2	< 0.5	< 0.5	< 1
Benzo[j]fluoranthene	< 0.2	< 0.2	< 0.5	< 0.5	< 1
Benzo[k]fluoranthene	< 0.2	< 0.2	< 0.5	< 0.5	< 1
Benzo[a]pyrene	< 0.2	< 0.2	< 0.5	< 0.5	< 1
Benzo[e]pyrene	< 0.2	< 0.2	< 0.5	< 0.5	< 1
Indeno[1,2,3-c,d] pyrene	< 0.2	< 0.2	< 0.5	< 0.5	< 1
Dibenzo[a,h]anthracene	< 0.2	< 0.2	< 0.5	< 0.5	< 1
Benzo[g,h,i]perylene	< 0.2	< 0.2	< 0.5	< 0.5	< 1
18項PAH總濃度 (Sum of 18 PAH)	< 1	< 5	< 10	< 20	< 50

This document is issued by the Company subject to its General Conditions of Service printed overleaf, available on request or accessible at http://www.sgs.com/en/Terms-and-Conditions.aspx and, for electronic format documents, subject to Terms and Conditions for Electronic Documents at http://www.sgs.com/en/Terms-and-Conditions/Terms-e-Document.aspx. Attention is drawn to the limitation of liability, indemnification and jurisdiction issues defined therein. Any holder of this document is advised that information contained hereon reflects the Company's findings at the time of its intervention only and within the limits of Client's instructions, if any. The Company's sole responsibility is to its Client and this document does not exonerate parties to a transaction from exercising all their rights and obligations under the transaction documents. This document cannot be reproduced except in full, without prior written approval of the Company. Any unauthorized alteration, forgery or falsification of the content or appearance of this document is unlawful and offenders may be prosecuted to the fullest extent of the law. Unless otherwise stated the results shown in this test report refer only to the sample(s) tested.

Confidential, Do Not Disseminate.

SGS

化學實驗室-高雄 Chemical Laboratory - Kao., SGS Taiwan Ltd.

試驗報告

號碼(No.) : KA/2018/12122A-01 日期(Date) : 2018/02/26 頁數 (Page) : 9 of 20

Test Report

欣統股份有限公司 / 東莞市欣杭電子有限公司
SYNTON-TECH CORPORATION / SYNTRONIC CORPORATION
台灣省新北市汐止區新台五路一段79號16樓之3 / 廣東省東莞市大朗鎮水 村水常一路13號
16F-3, NO. 79, FAR EAST WORLD CENTER SEC. 1, HSIN TAI WU ROAD, HSI-CHIH DIST., NEW TAIPEI CITY, TAIWAN.
NO. 13, SHUI CHANG YI RD., SHUI KOU LNDUSTRIAL ZONE DA LANG, DONG GUAN, GUANG DONG, CHINA

重金屬流程圖 / Analytical flow chart of Heavy Metal

根據以下的流程圖之條件，樣品已完全溶解。（六價鉻測試方法除外）
These samples were dissolved totally by pre-conditioning method according to below flow chart.（Cr^{6+} test method excluded）

- 測試人員：劉俊宏/ Technician : Jony Liu
- 測試負責人：張伯豪/ Supervisor: Ray Chang

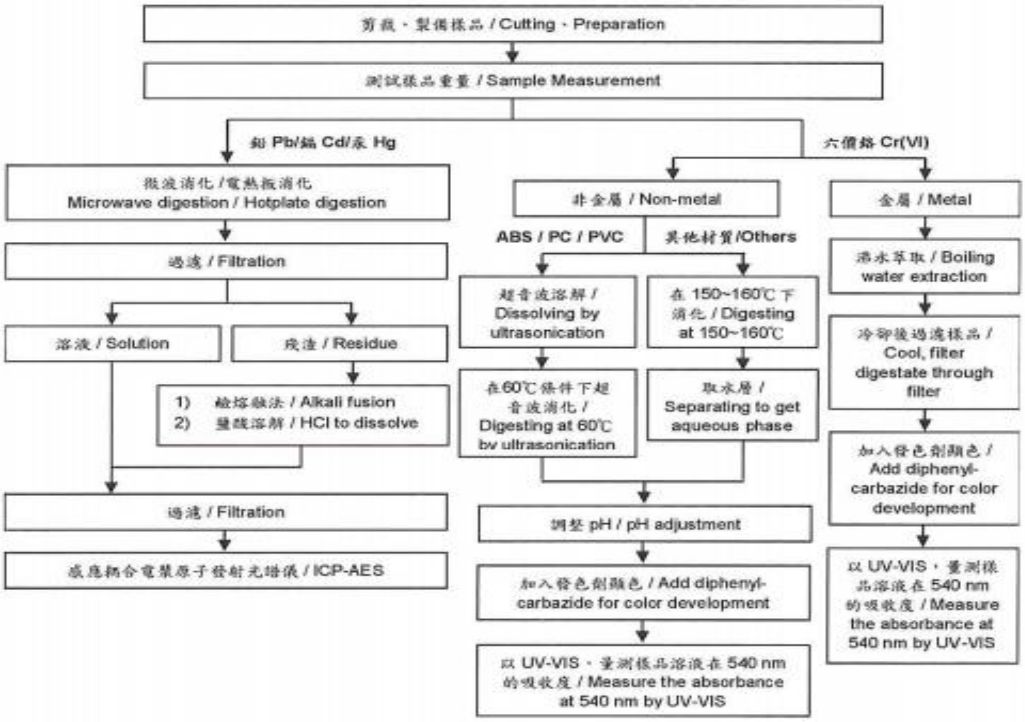

This document is issued by the Company subject to its General Conditions of Service printed overleaf, available on request or accessible at http://www.sgs.com/en/Terms-and-Conditions.aspx and, for electronic format documents, subject to Terms and Conditions for Electronic Documents at http://www.sgs.com/en/Terms-and-Conditions/Terms-e-Document.aspx. Attention is drawn to the limitation of liability, indemnification and jurisdiction issues defined therein. Any holder of this document is advised that information contained hereon reflects the Company's findings at the time of its intervention only and within the limits of Client's instructions, if any. The Company's sole responsibility is to its Client and this document does not exonerate parties to a transaction from exercising all their rights and obligations under the transaction documents. This document cannot be reproduced except in full, without prior written approval of the Company. Any unauthorized alteration, forgery or falsification of the content or appearance of this document is unlawful and offenders may be prosecuted to the fullest extent of the law. Unless otherwise stated the results shown in this test report refer only to the sample(s) tested.

Confidential, Do Not Disseminate.

SGS

化學實驗室-高雄 Chemical Laboratory - Kao., SGS Taiwan Ltd.

試驗報告

號碼(No.) : KA/2018/12122A-01 日期(Date) : 2018/02/26 頁數 (Page) : 10 of 20

Test Report

欣統股份有限公司 / 東莞市欣杭電子有限公司
SYNTON-TECH CORPORATION / SYNTRONIC CORPORATION
台灣省新北市汐止區新台五路一段79號16樓之3 / 廣東省東莞市大朗鎮水 村水常一路13號
16F-3, NO. 79, FAR EAST WORLD CENTER SEC. 1, HSIN TAI WU ROAD, HSI-CHIH DIST., NEW TAIPEI CITY, TAIWAN.
NO. 13, SHUI CHANG YI RD., SHUI KOU LNDUSTRIAL ZONE DA LANG, DONG GUAN, GUANG DONG, CHINA

多溴聯苯/多溴聯苯醚 分析流程圖 / PBB/PBDE analytical FLOW CHART

1)測試人員：陳威錚 / Name of the person who made measurement: Dorothy Chen
2)測試負責人：張伯睿 / Name of the person in charge of measurement: Ray Chang

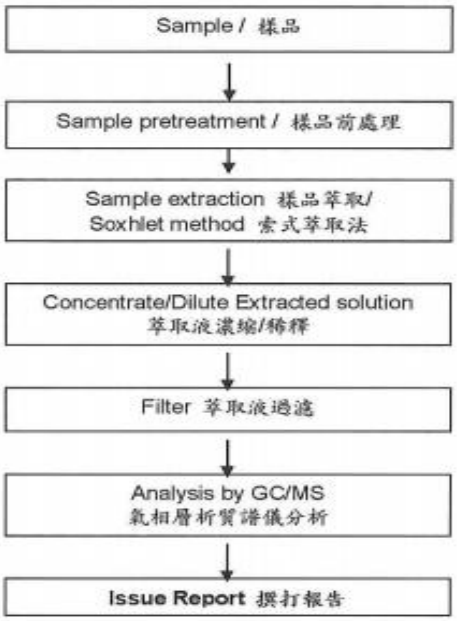

This document is issued by the Company subject to its General Conditions of Service printed overleaf, available on request or accessible at http://www.sgs.com/en/Terms-and-Conditions.aspx and, for electronic format documents, subject to Terms and Conditions for Electronic Documents at http://www.sgs.com/en/Terms-and-Conditions/Terms-e-Document.aspx. Attention is drawn to the limitation of liability, indemnification and jurisdiction issues defined therein. Any holder of this document is advised that information contained hereon reflects the Company's findings at the time of its intervention only and within the limits of Client's instructions, if any. The Company's sole responsibility is to its Client and this document does not exonerate parties to a transaction from exercising all their rights and obligations under the transaction documents. This document cannot be reproduced except in full, without prior written approval of the Company. Any unauthorized alteration, forgery or falsification of the content or appearance of this document is unlawful and offenders may be prosecuted to the fullest extent of the law. Unless otherwise stated the results shown in this test report refer only to the sample(s) tested.

TWC3705562

SGS Taiwan Ltd. 台灣檢驗科技股份有限公司 | No.61, Kai-Fa Road, Nanzih Export Processing Zone, Kaohsiung, Taiwan /高雄市楠梓加工出口區開發路61號
t (886-7) 301-2121 f (886-7) 301-0867 www.sgs.tw
Member of SGS Group

SGS

化學實驗室-高雄 Chemical Laboratory - Kao., SGS Taiwan Ltd.

試驗報告

號碼(No.) : KA/2018/12122A-01 日期(Date) : 2018/02/26 頁數 (Page) : 11 of 20

Test Report

欣統股份有限公司 / 東莞市欣杭電子有限公司
SYNTON-TECH CORPORATION / SYNTRONIC CORPORATION
台灣省新北市汐止區新台五路一段79號16樓之3 / 廣東省東莞市大朗鎮水 村水富一路13號
16F-3, NO. 79, FAR EAST WORLD CENTER SEC. 1, HSIN TAI WU ROAD, HSI-CHIH DIST., NEW TAIPEI CITY, TAIWAN.
NO. 13, SHUI CHANG YI RD., SHUI KOU LNDUSTRIAL ZONE DA LANG, DONG GUAN, GUANG DONG, CHINA

可塑劑分析流程圖 / Analytical flow chart of phthalate content

- 測試人員：陳盛鈴 / Name of the person who made measurement: Dorothy Chen
- 測試負責人：張伯睿 / Name of the person in charge of measurement: Ray Chang

【測試方法/Test method: IEC 62321-8】

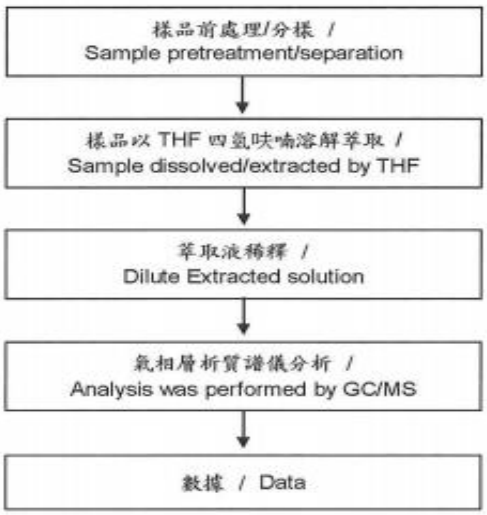

This document is issued by the Company subject to its General Conditions of Service printed overleaf, available on request or accessible at http://www.sgs.com/en/Terms-and-Conditions.aspx and, for electronic format documents, subject to Terms and Conditions for Electronic Documents at http://www.sgs.com/en/Terms-and-Conditions/Terms-e-Document.aspx. Attention is drawn to the limitation of liability, indemnification and jurisdiction issues defined therein. Any holder of this document is advised that information contained hereon reflects the Company's findings at the time of its intervention only and within the limits of Client's instructions, if any. The Company's sole responsibility is to its Client and this document does not exonerate parties to a transaction from exercising all their rights and obligations under the transaction documents. This document cannot be reproduced except in full, without prior written approval of the Company. Any unauthorized alteration, forgery or falsification of the content or appearance of this document is unlawful and offenders may be prosecuted to the fullest extent of the law. Unless otherwise stated the results shown in this test report refer only to the sample(s) tested.

TWC3705561

2001

SGS Taiwan Ltd. 台灣檢驗科技股份有限公司 | No.61, Kai -Fa Road, Nanzih Export Processing Zone, Kaohsiung, Taiwan /高雄市楠梓加工出口區開發路61號 t (886-7) 301-2121 f (886-7) 301-0867 www.sgs.tw

Member of SGS Group

SGS

化學實驗室-高雄 Chemical Laboratory - Kao., SGS Taiwan Ltd.

試驗報告

號碼(No.) : KA/2018/12122A-01 日期(Date) : 2018/02/26 頁數 (Page) : 12 of 20

Test Report

欣統股份有限公司 / 東莞市欣杭電子有限公司
SYNTON-TECH CORPORATION / SYNTRONIC CORPORATION
台灣省新北市汐止區新台五路一段79號16樓之3 / 廣東省東莞市大朗鎮水 村水常一路13號
16F-3, NO. 79, FAR EAST WORLD CENTER SEC. 1, HSIN TAI WU ROAD, HSI-CHIH DIST., NEW TAIPEI CITY, TAIWAN.
NO. 13, SHUI CHANG YI RD., SHUI KOU LNDUSTRIAL ZONE DA LANG, DONG GUAN, GUANG DONG, CHINA

1) 根據以下的流程圖之條件，樣品已完全溶解。 / These samples were dissolved totally by pre-conditioning method according to below flow chart.
2) 測試人員：劉俊宏 / Name of the person who made measurement: Jony Liu
3) 測試負責人：張伯睿 / Name of the person in charge of measurement: Ray Chang

元素以 ICP-AES 分析的消化流程圖
(Flow Chart of digestion for the elements analysis performed by ICP-AES)

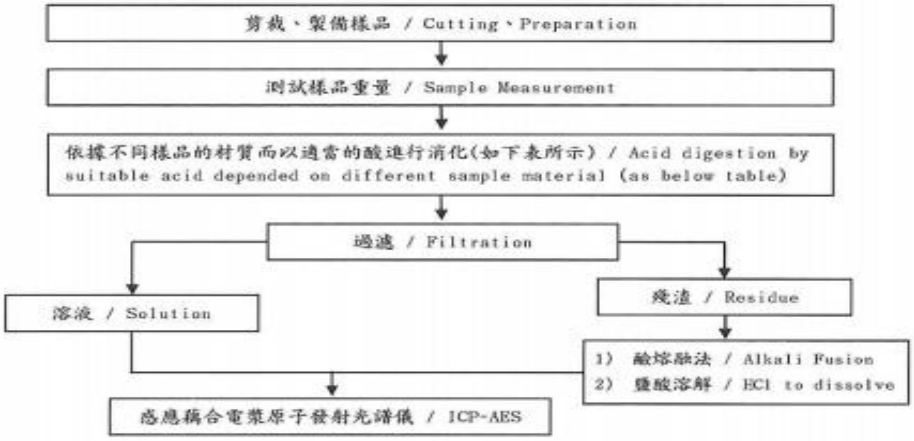

鋼.銅.鋁.焊錫 / Steel, copper, aluminum, solder	王水.硝酸.鹽酸.氫氟酸.雙氧水 / Aqua regia, HNO_3, HCl, HF, H_2O_2
玻璃 / Glass	硝酸.氫氟酸 / HNO_3/HF
金.鉑.鈀.陶瓷 / Gold, platinum, palladium, ceramic	王水 / Aqua regia
銀 / Silver	硝酸 / HNO_3
塑膠 / Plastic	硫酸.雙氧水.硝酸.鹽酸 / H_2SO_4, H_2O_2, HNO_3, HCl
其他 / Others	加入任何酸至完全溶解 / Any acid to total digestion

This document is issued by the Company subject to its General Conditions of Service printed overleaf, available on request or accessible at http://www.sgs.com/en/Terms-and-Conditions.aspx and, for electronic format documents, subject to Terms and Conditions for Electronic Documents at http://www.sgs.com/en/Terms-and-Conditions/Terms-e-Document.aspx. Attention is drawn to the limitation of liability, indemnification and jurisdiction issues defined therein. Any holder of this document is advised that information contained hereon reflects the Company's findings at the time of its intervention only and within the limits of Client's instructions, if any. The Company's sole responsibility is to its Client and this document does not exonerate parties to a transaction from exercising all their rights and obligations under the transaction documents. This document cannot be reproduced except in full, without prior written approval of the Company. Any unauthorized alteration, forgery or falsification of the content or appearance of this document is unlawful and offenders may be prosecuted to the fullest extent of the law. Unless otherwise stated the results shown in this test report refer only to the sample(s) tested.

Confidential, Do Not Disseminate.

SGS

化學實驗室-高雄 Chemical Laboratory - Kao., SGS Taiwan Ltd.

試驗報告

號碼(No.) : KA/2018/12122A-01 日期(Date) : 2018/02/26 頁數 (Page) : 13 of 20

Test Report

欣統股份有限公司 / 東莞市欣杭電子有限公司
SYNTON-TECH CORPORATION / SYNTRONIC CORPORATION
台灣省新北市汐止區新台五路一段79號16樓之3 / 廣東省東莞市大朗鎮水 村水常一路13號
16F-3, NO. 79, FAR EAST WORLD CENTER SEC. 1, HSIN TAI WU ROAD, HSI-CHIH DIST., NEW TAIPEI CITY, TAIWAN.
NO. 13, SHUI CHANG YI RD., SHUI KOU LNDUSTRIAL ZONE DA LANG, DONG GUAN, GUANG DONG, CHINA

六溴環十二烷分析流程圖 / HBCDD analytical flow chart

1) 測試人員：陳威錚/ Name of the person who made measurement: Dorothy Chen
2) 測試負責人：張伯宏/ Name of the person in charge of measurement: Ray Chang

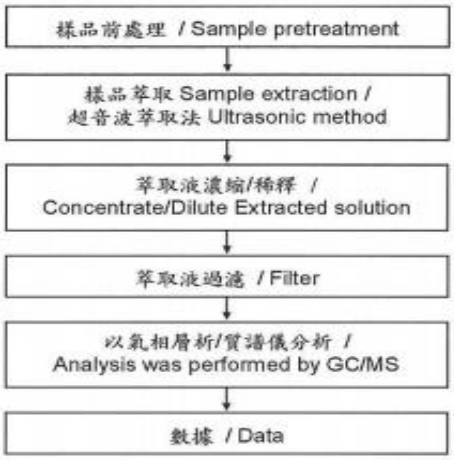

This document is issued by the Company subject to its General Conditions of Service printed overleaf, available on request or accessible at http://www.sgs.com/en/Terms-and-Conditions.aspx and, for electronic format documents, subject to Terms and Conditions for Electronic Documents at http://www.sgs.com/en/Terms-and-Conditions/Terms-e-Document.aspx. Attention is drawn to the limitation of liability, indemnification and jurisdiction issues defined therein. Any holder of this document is advised that information contained hereon reflects the Company's findings at the time of its intervention only and within the limits of Client's instructions, if any. The Company's sole responsibility is to its Client and this document does not exonerate parties to a transaction from exercising all their rights and obligations under the transaction documents. This document cannot be reproduced except in full, without prior written approval of the Company. Any unauthorized alteration, forgery or falsification of the content or appearance of this document is unlawful and offenders may be prosecuted to the fullest extent of the law. Unless otherwise stated the results shown in this test report refer only to the sample(s) tested.

TWC3705559

SGS Taiwan Ltd. 台灣檢驗科技股份有限公司 | No.61, Kai -Fa Road, Nanzih Export Processing Zone, Kaohsiung, Taiwan /高雄市楠梓加工出口區開發路61號 | t (886-7) 301-2121 f (886-7) 301-0867 | www.sgs.tw

Member of SGS Group

2001

SGS

化學實驗室-高雄 Chemical Laboratory - Kao., SGS Taiwan Ltd.

試驗報告

號碼(No.) : KA/2018/12122A-01 日期(Date) : 2018/02/26 頁數 (Page) : 14 of 20

Test Report

欣統股份有限公司 / 東莞市欣杭電子有限公司
SYNTON-TECH CORPORATION / SYNTRONIC CORPORATION
台灣省新北市汐止區新台五路一段79號16樓之3 / 廣東省東莞市大朗鎮水 村水雷一路13號
16F-3, NO. 79, FAR EAST WORLD CENTER SEC. 1, HSIN TAI WU ROAD, HSI-CHIH DIST., NEW TAIPEI CITY, TAIWAN.
NO. 13, SHUI CHANG YI RD., SHUI KOU LNDUSTRIAL ZONE DA LANG, DONG GUAN, GUANG DONG, CHINA

富馬酸二甲酯分析流程圖 /
Analytical flow chart of Dimethyl Fumarate content

1) 測試人員：陳威錚 / Name of the person who made measurement: Dorothy Chen
2) 測試負責人：張伯睿 / Name of the person in charge of measurement: Ray Chang

This document is issued by the Company subject to its General Conditions of Service printed overleaf, available on request or accessible at http://www.sgs.com/en/Terms-and-Conditions.aspx and, for electronic format documents, subject to Terms and Conditions for Electronic Documents at http://www.sgs.com/en/Terms-and-Conditions/Terms-e-Document.aspx. Attention is drawn to the limitation of liability, indemnification and jurisdiction issues defined therein. Any holder of this document is advised that information contained hereon reflects the Company's findings at the time of its intervention only and within the limits of Client's instructions, if any. The Company's sole responsibility is to its Client and this document does not exonerate parties to a transaction from exercising all their rights and obligations under the transaction documents. This document cannot be reproduced except in full, without prior written approval of the Company. Any unauthorized alteration, forgery or falsification of the content or appearance of this document is unlawful and offenders may be prosecuted to the fullest extent of the law. Unless otherwise stated the results shown in this test report refer only to the sample(s) tested.

TWC3705558

SGS Taiwan Ltd. 台灣檢驗科技股份有限公司 | No.61, Kai -Fa Road, Nanzih Export Processing Zone, Kaohsiung, Taiwan /高雄市楠梓加工出口區開發路61號 | t (886-7) 301-2121 f (886-7) 301-0867 | www.sgs.tw

Member of SGS Group

2001

SGS

化學實驗室-高雄 Chemical Laboratory - Kao., SGS Taiwan Ltd.

試驗報告

號碼(No.) : KA/2018/12122A-01 日期(Date) : 2018/02/26 頁數 (Page) : 15 of 20

Test Report

欣統股份有限公司 / 東莞市欣杭電子有限公司
SYNTON-TECH CORPORATION / SYNTRONIC CORPORATION
台灣省新北市汐止區新台五路一段79號16樓之3 / 廣東省東莞市大朗鎮水 村水常一路13號
16F-3, NO. 79, FAR EAST WORLD CENTER SEC. 1, HSIN TAI WU ROAD, HSI-CHIH DIST., NEW TAIPEI CITY, TAIWAN.
NO. 13, SHUI CHANG YI RD., SHUI KOU LNDUSTRIAL ZONE DA LANG, DONG GUAN, GUANG DONG, CHINA

聚氯乙烯物質判定分析流程圖 /

Analysis flow chart for determination of PVC in material

1)測試人員：戴秀純 / Name of the person who made measurement: Hannah Tai
2)測試負責人：林立翔 / Name of the person in charge of measurement: Roger Lin

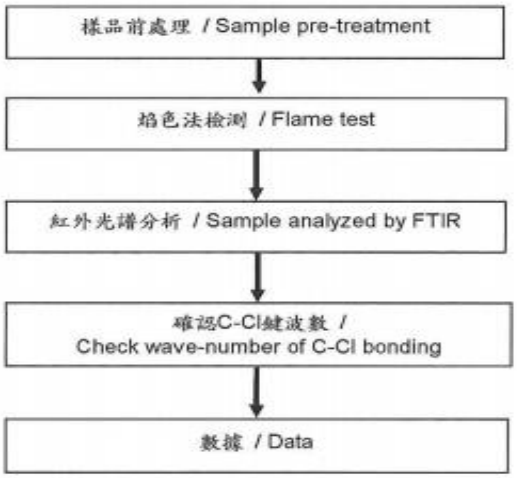

This document is issued by the Company subject to its General Conditions of Service printed overleaf, available on request or accessible at http://www.sgs.com/en/Terms-and-Conditions.aspx and, for electronic format documents, subject to Terms and Conditions for Electronic Documents at http://www.sgs.com/en/Terms-and-Conditions/Terms-e-Document.aspx. Attention is drawn to the limitation of liability, indemnification and jurisdiction issues defined therein. Any holder of this document is advised that information contained hereon reflects the Company's findings at the time of its intervention only and within the limits of Client's instructions, if any. The Company's sole responsibility is to its Client and this document does not exonerate parties to a transaction from exercising all their rights and obligations under the transaction documents. This document cannot be reproduced except in full, without prior written approval of the Company. Any unauthorized alteration, forgery or falsification of the content or appearance of this document is unlawful and offenders may be prosecuted to the fullest extent of the law. Unless otherwise stated the results shown in this test report refer only to the sample(s) tested.

TWC3705557

SGS Taiwan Ltd. 台灣檢驗科技股份有限公司 | No.61, Kai -Fa Road, Nanzih Export Processing Zone, Kaohsiung, Taiwan /高雄市楠梓加工出口區開發路61號 | t (886-7) 301-2121 f (886-7) 301-0867 | www.sgs.tw

Member of SGS Group

SGS

化學實驗室-高雄 Chemical Laboratory - Kao., SGS Taiwan Ltd.

試驗報告

號碼(No.) : KA/2018/12122A-01 日期(Date) : 2018/02/26 頁數 (Page) : 16 of 20

Test Report

欣統股份有限公司 / 東莞市欣杭電子有限公司
SYNTON-TECH CORPORATION / SYNTRONIC CORPORATION
台灣省新北市汐止區新台五路一段79號16樓之3 / 廣東省東莞市大朗鎮水 村水常一路13號
16F-3, NO. 79, FAR EAST WORLD CENTER SEC. 1, HSIN TAI WU ROAD, HSI-CHIH DIST., NEW TAIPEI CITY, TAIWAN.
NO. 13, SHUI CHANG YI RD., SHUI KOU LNDUSTRIAL ZONE DA LANG, DONG GUAN, GUANG DONG, CHINA

紅磷分析流程 / Analytical flow chart of Red phosphorus

- 測試人員：林建宇 / Name of the person who made measurement: Roy Lin
- 測試負責人：張啟興 / Name of the person in charge of measurement: Troy Chang

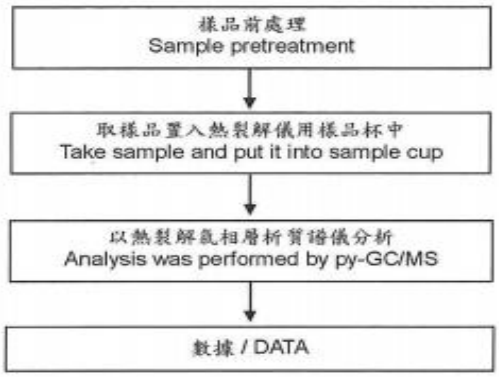

This document is issued by the Company subject to its General Conditions of Service printed overleaf, available on request or accessible at http://www.sgs.com/en/Terms-and-Conditions.aspx and, for electronic format documents, subject to Terms and Conditions for Electronic Documents at http://www.sgs.com/en/Terms-and-Conditions/Terms-e-Document.aspx. Attention is drawn to the limitation of liability, indemnification and jurisdiction issues defined therein. Any holder of this document is advised that information contained hereon reflects the Company's findings at the time of its intervention only and within the limits of Client's instructions, if any. The Company's sole responsibility is to its Client and this document does not exonerate parties to a transaction from exercising all their rights and obligations under the transaction documents. This document cannot be reproduced except in full, without prior written approval of the Company. Any unauthorized alteration, forgery or falsification of the content or appearance of this document is unlawful and offenders may be prosecuted to the fullest extent of the law. Unless otherwise stated the results shown in this test report refer only to the sample(s) tested.

TWC3705556

SGS Taiwan Ltd. 台灣檢驗科技股份有限公司 | No.61, Kai-Fa Road, Nanzih Export Processing Zone, Kaohsiung, Taiwan / 高雄市楠梓加工出口區開發路61號 | t (886-7) 301-2121 f (886-7) 301-0867 | www.sgs.tw

Member of SGS Group

SGS

化學實驗室-高雄 Chemical Laboratory - Kao., SGS Taiwan Ltd.

試驗報告

號碼(No.) : KA/2018/12122A-01 日期(Date) : 2018/02/26 頁數 (Page) : 17 of 20

Test Report

欣統股份有限公司 / 東莞市欣杭電子有限公司
SYNTON-TECH CORPORATION / SYNTRONIC CORPORATION
台灣省新北市汐止區新台五路一段79號16樓之3 / 廣東省東莞市大朗鎮水 村水常一路13號
16F-3, NO. 79, FAR EAST WORLD CENTER SEC. 1, HSIN TAI WU ROAD, HSI-CHIH DIST., NEW TAIPEI CITY, TAIWAN.
NO. 13, SHUI CHANG YI RD., SHUI KOU LNDUSTRIAL ZONE DA LANG, DONG GUAN, GUANG DONG, CHINA

全氟辛酸(鹽)/ 全氟辛烷磺酸分析流程圖 /
Analytical flow chart of PFOA/PFOS content

1)測試人員：黃璟嬰 / Name of the person who made measurement: Ginny Huang

2)測試負責人：張伯睿 / Name of the person in charge of measurement: Ray Chang

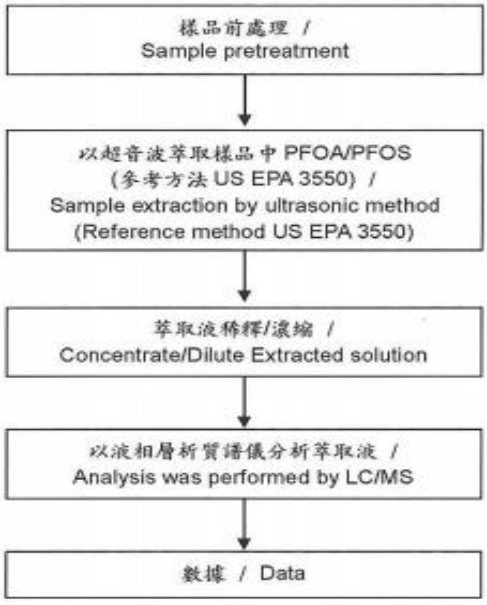

This document is issued by the Company subject to its General Conditions of Service printed overleaf, available on request or accessible at http://www.sgs.com/en/Terms-and-Conditions.aspx and, for electronic format documents, subject to Terms and Conditions for Electronic Documents at http://www.sgs.com/en/Terms-and-Conditions/Terms-e-Document.aspx. Attention is drawn to the limitation of liability, indemnification and jurisdiction issues defined therein. Any holder of this document is advised that information contained hereon reflects the Company's findings at the time of its intervention only and within the limits of Client's instructions, if any. The Company's sole responsibility is to its Client and this document does not exonerate parties to a transaction from exercising all their rights and obligations under the transaction documents. This document cannot be reproduced except in full, without prior written approval of the Company. Any unauthorized alteration, forgery or falsification of the content or appearance of this document is unlawful and offenders may be prosecuted to the fullest extent of the law. Unless otherwise stated the results shown in this test report refer only to the sample(s) tested.

TWC3705555

SGS Taiwan Ltd. 台灣檢驗科技股份有限公司 | No.61, Kai-Fa Road, Nanzih Export Processing Zone, Kaohsiung, Taiwan /高雄市楠梓加工出口區開發路61號
t (886-7) 301-2121 f (886-7) 301-0867 www.sgs.tw
Member of SGS Group

2001

SGS

化學實驗室-高雄 Chemical Laboratory - Kao., SGS Taiwan Ltd.

試驗報告

Test Report

號碼(No.) : KA/2018/12122A-01 日期(Date) : 2018/02/26 頁數 (Page) : 18 of 20

欣統股份有限公司 / 東莞市欣杭電子有限公司
SYNTON-TECH CORPORATION / SYNTRONIC CORPORATION
台灣省新北市汐止區新台五路一段79號16樓之3 / 廣東省東莞市大朗鎮水 村水雪一路13號
16F-3, NO. 79, FAR EAST WORLD CENTER SEC. 1, HSIN TAI WU ROAD, HSI-CHIH DIST., NEW TAIPEI CITY, TAIWAN.
NO. 13, SHUI CHANG YI RD., SHUI KOU LNDUSTRIAL ZONE DA LANG, DONG GUAN, GUANG DONG, CHINA

鹵素分析流程圖 / Analytical flow chart of halogen content

1) 測試人員：洪秀眞/ Name of the person who made measurement: Jean Hung
2) 測試負責人：張伯睿/ Name of the person in charge of measurement: Ray Chang

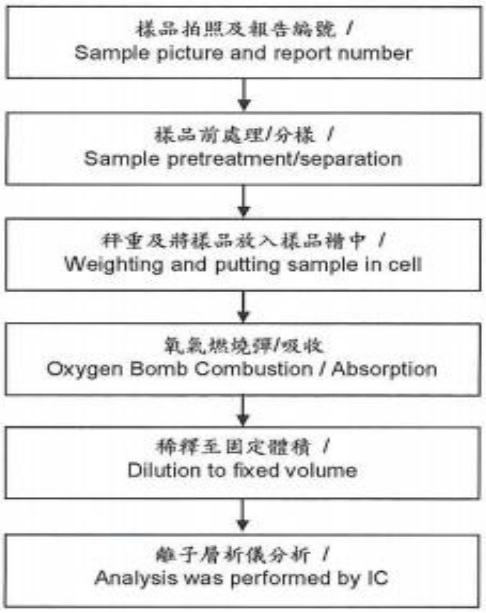

This document is issued by the Company subject to its General Conditions of Service printed overleaf, available on request or accessible at http://www.sgs.com/en/Terms-and-Conditions.aspx and, for electronic format documents, subject to Terms and Conditions for Electronic Documents at http://www.sgs.com/en/Terms-and-Conditions/Terms-e-Document.aspx. Attention is drawn to the limitation of liability, indemnification and jurisdiction issues defined therein. Any holder of this document is advised that information contained hereon reflects the Company's findings at the time of its intervention only and within the limits of Client's instructions, if any. The Company's sole responsibility is to its Client and this document does not exonerate parties to a transaction from exercising all their rights and obligations under the transaction documents. This document cannot be reproduced except in full, without prior written approval of the Company. Any unauthorized alteration, forgery or falsification of the content or appearance of this document is unlawful and offenders may be prosecuted to the fullest extent of the law. Unless otherwise stated the results shown in this test report refer only to the sample(s) tested.

TWC3705554

SGS Taiwan Ltd. 台灣檢驗科技股份有限公司 | No.61, Kai-Fa Road, Nanzih Export Processing Zone, Kaohsiung, Taiwan /高雄市楠梓加工出口區開發路61號
t (886-7) 301-2121 f (886-7) 301-0867 www.sgs.tw
Member of SGS Group

2001

SGS

化學實驗室-高雄 Chemical Laboratory - Kao., SGS Taiwan Ltd.

試驗報告

Test Report

號碼(No.) : KA/2018/12122A-01 日期(Date) : 2018/02/26 頁數 (Page) : 19 of 20

欣統股份有限公司 / 東莞市欣杭電子有限公司
SYNTON-TECH CORPORATION / SYNTRONIC CORPORATION
台灣省新北市汐止區新台五路一段79號16樓之3 / 廣東省東莞市大朗鎮水 村水常一路13號
16F-3, NO. 79, FAR EAST WORLD CENTER SEC. 1, HSIN TAI WU ROAD, HSI-CHIH DIST., NEW TAIPEI CITY, TAIWAN.
NO. 13, SHUI CHANG YI RD., SHUI KOU LNDUSTRIAL ZONE DA LANG, DONG GUAN, GUANG DONG, CHINA

多苯環芳香族化合物分析流程圖 /
PAHs (Poly Aromatic Hydrocarbons) analytical flow chart

1)測試人員：陳威舜 / Name of the person who made measurement: Dorothy Chen

2)測試負責人：張伯睿 / Name of the person in charge of measurement: Ray Chang

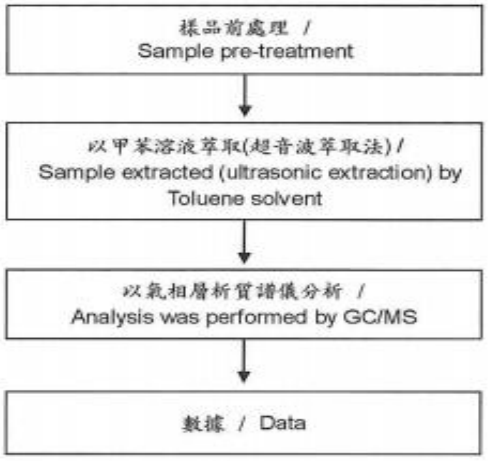

This document is issued by the Company subject to its General Conditions of Service printed overleaf, available on request or accessible at http://www.sgs.com/en/Terms-and-Conditions.aspx and, for electronic format documents, subject to Terms and Conditions for Electronic Documents at http://www.sgs.com/en/Terms-and-Conditions/Terms-e-Document.aspx. Attention is drawn to the limitation of liability, indemnification and jurisdiction issues defined therein. Any holder of this document is advised that information contained hereon reflects the Company's findings at the time of its intervention only and within the limits of Client's instructions, if any. The Company's sole responsibility is to its Client and this document does not exonerate parties to a transaction from exercising all their rights and obligations under the transaction documents. This document cannot be reproduced except in full, without prior written approval of the Company. Any unauthorized alteration, forgery or falsification of the content or appearance of this document is unlawful and offenders may be prosecuted to the fullest extent of the law. Unless otherwise stated the results shown in this test report refer only to the sample(s) tested.

TWC3705553

2001

SGS Taiwan Ltd. 台灣檢驗科技股份有限公司 | No.61, Kai -Fa Road, Nanzih Export Processing Zone, Kaohsiung, Taiwan /高雄市楠梓加工出口區開發路61號
t (886-7) 301-2121 f (886-7) 301-0867 www.sgs.tw
Member of SGS Group

SGS

化學實驗室-高雄 Chemical Laboratory - Kao., SGS Taiwan Ltd.

試驗報告

號碼(No.) : KA/2018/12122A-01 日期(Date) : 2018/02/26 頁數 (Page) : 20 of 20

Test Report

欣統股份有限公司 / 東莞市欣杭電子有限公司
SYNTON-TECH CORPORATION / SYNTRONIC CORPORATION
台灣省新北市汐止區新台五路一段79號16樓之3 / 廣東省東莞市大朗鎮水 村水常一路13號
16F-3, NO. 79, FAR EAST WORLD CENTER SEC. 1, HSIN TAI WU ROAD, HSI-CHIH DIST., NEW TAIPEI CITY, TAIWAN.
NO. 13, SHUI CHANG YI RD., SHUI KOU LNDUSTRIAL ZONE DA LANG, DONG GUAN, GUANG DONG, CHINA

* 照片中如有箭頭標示，則表示為實際檢測之樣品/部位. *
(The tested sample / part is marked by an arrow if it's shown on the photo.)

KA/2018/12122

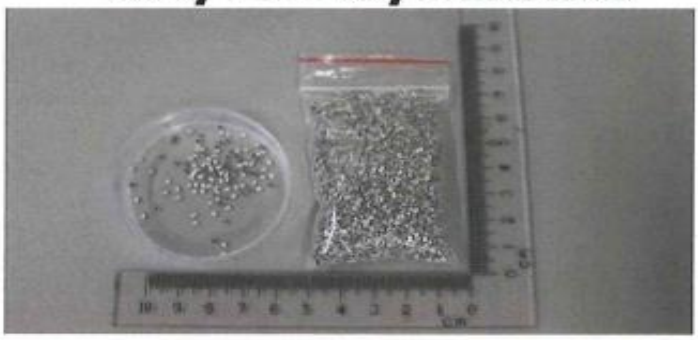

** 報告結尾 (End of Report) **

This document is issued by the Company subject to its General Conditions of Service printed overleaf, available on request or accessible at http://www.sgs.com/en/Terms-and-Conditions.aspx and, for electronic format documents, subject to Terms and Conditions for Electronic Documents at http://www.sgs.com/en/Terms-and-Conditions/Terms-e-Document.aspx. Attention is drawn to the limitation of liability, indemnification and jurisdiction issues defined therein. Any holder of this document is advised that information contained hereon reflects the Company's findings at the time of its intervention only and within the limits of Client's instructions, if any. The Company's sole responsibility is to its Client and this document does not exonerate parties to a transaction from exercising all their rights and obligations under the transaction documents. This document cannot be reproduced except in full, without prior written approval of the Company. Any unauthorized alteration, forgery or falsification of the content or appearance of this document is unlawful and offenders may be prosecuted to the fullest extent of the law. Unless otherwise stated the results shown in this test report refer only to the sample(s) tested.

TWC3705552 2001

SGS Taiwan Ltd. 台灣檢驗科技股份有限公司 | No.61, Kai-Fa Road, Nanzih Export Processing Zone, Kaohsiung, Taiwan /高雄市楠梓加工出口區開發路61號
t (886-7) 301-2121 f (886-7) 301-0867 www.sgs.tw
Member of SGS Group